COOKS
professional

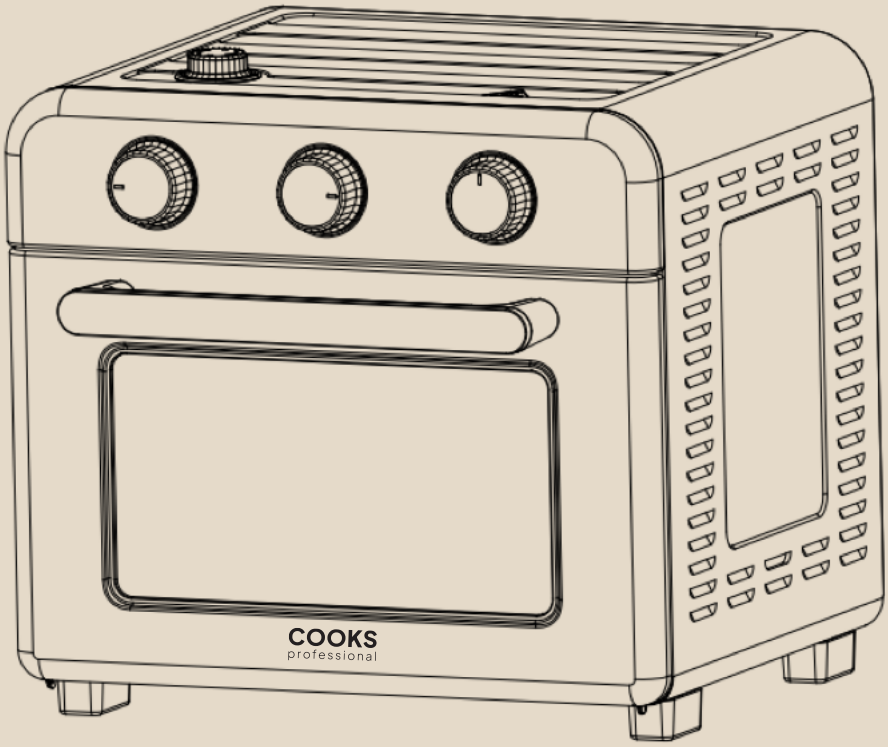

6-in-1 Air Fryer Oven
Instruction Manual

Product Code: K1065 • K1066 • K1067 • K1068

After Sales Support
care@cooksprofessional.co.uk

For correct usage, please read these instructions carefully before use and keep in a safe place for future reference.

REGISTER NOW FOR EXTENDED 2-YEAR WARRANTY

When you buy direct from the Cooks Professional website your free 2-year warranty is automatically applied upon purchase (no further action required).

If you purchased your product through a different retailer website you can register your product for an extended 2-year warranty by visiting **www.cooksprofessional.co.uk/extended-warranty** or scan the QR code.

V1: 07/26

COOKS
professional

INTRODUCTION

Congratulations!

You have made an excellent choice with the purchase of this quality Cooks Professional product.

By doing so you now have the assurance and peace of mind which comes from purchasing a product that has been manufactured to the highest standards, performance and safety.

We want you to be completely satisfied with your purchase, so this Cooks Professional product is backed by our comprehensive manufacturer's guarantee and an outstanding after sales service through our dedicated Customer Care team.

We hope you enjoy using your product for many years to come.

TECHNICAL SPECIFICATIONS

Model:	K1065, K1066, K1067, K1068
Voltage:	220–240V ~ 50Hz
Rated Power:	1400W
Off Mode Power Consumption:	0W

SAFETY INSTRUCTIONS

Please read all instructions carefully before using this appliance and keep them for future reference.

- This appliance must not be used by children. Keep the appliance and its power cord out of reach of children.
- This appliance may be used by persons with reduced physical, sensory or mental capabilities, or lack of experience and knowledge, only if they have been given supervision or instruction concerning safe use of the appliance and understand the hazards involved. Children over 8 may only use the appliance under the supervision of a responsible person.
- Before use, check that the mains voltage matches the rating shown on the appliance rating label.
- Always place the appliance on a dry, stable, level surface, in the centre of the worktop.
- Allow a clearance of at least 10–15 cm on all sides. Do not place the appliance against a wall or next to other appliances.
- Do not place or use the appliance on or near hot surfaces, such as a hob, oven, gas burner or heater, and keep it away from direct sunlight.
- Do not use the appliance on heat-sensitive surfaces such as glass, wood or tablecloths. If unavoidable, place a heat-resistant mat underneath.
- Do not use the appliance near water sources such as a sink, and do not use it outdoors.
- Do not allow the power cord to hang over the edge of a worktop, or come into contact with sharp edges or hot surfaces.
- Do not pull, twist, knot or strain the power cord.
- Do not immerse the appliance, plug or power cord in water or any other liquid.
- Do not use the appliance with wet hands.
- Do not use the appliance if the plug, power cord or appliance is damaged. If the power cord is damaged, it must be replaced by the manufacturer, its service agent or a similarly qualified person.
- Only use the appliance with the accessories supplied. The use of non-approved accessories may cause injury, damage, fire or electric shock.
- Always unplug the appliance from the mains when not in use, before assembling or disassembling parts, and before cleaning. Allow it to cool fully first.
- Do not move the appliance while it is in operation.
- Do not place any objects on top of the appliance, and never cover the air outlet.
- Do not fill the appliance with oil or cooking oil. There is a risk of fire.
- Do not clean the appliance with metallic scouring pads or steel wool, as small metal parts could break off and cause an electric shock or damage.
- This appliance is designed for domestic use only. Only use it for its intended purpose.

CAUTION – RISK OF BURNS

- The exterior and some parts of the appliance become very hot during use. Never touch hot surfaces - always use the handles, and wear heat-resistant gloves when opening the appliance and removing parts or food.
- Hot steam is released through the air outlets during cooking, including from the steam function. Keep your hands and face a safe distance from the vents, and take care when opening the door or removing parts.
- Keep the appliance at least 30 cm away from any objects that could be damaged by escaping steam.
- Keep children and pets away from the appliance while it is in use.

USING THE STEAM FUNCTION SAFELY

- Only add clean, cold water through the designated water inlet on the top of the oven. Never add oil or any other liquid.
- Do not exceed the maximum fill of 14ml.
- The water converts to hot steam inside the cooking chamber - take great care, as steam will escape from the vents during cooking.

PRODUCT OVERVIEW

Air Fryer Oven Components

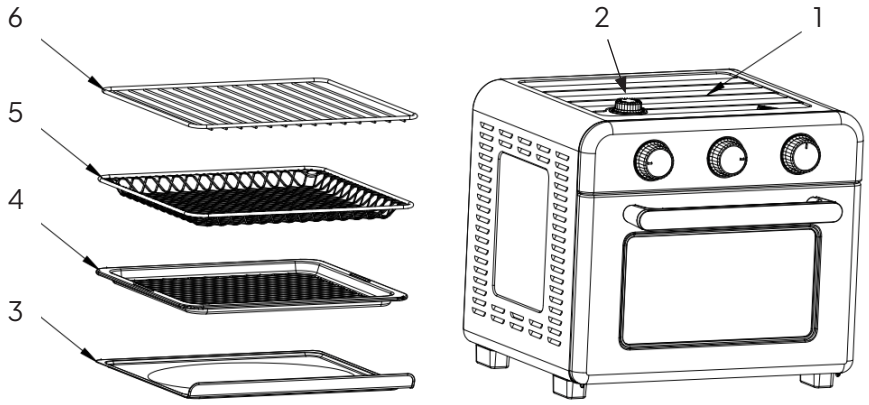

No	Component	Description / Function
1	Air fryer oven	Main body containing the heating elements, controls and cooking chamber.
2	Water inlet (steam function)	Opening on the top of the oven for adding water to create steam inside the chamber during cooking.
3	Crumb tray	Sits in the base of the chamber to catch oil and food particles. Removable for cleaning.
4	Baking pan	For baking, roasting and general cooking.
5	Air fry basket	Allows hot air to circulate around food for crisp results.
6	Wire rack	For toasting, grilling and multi-level cooking.

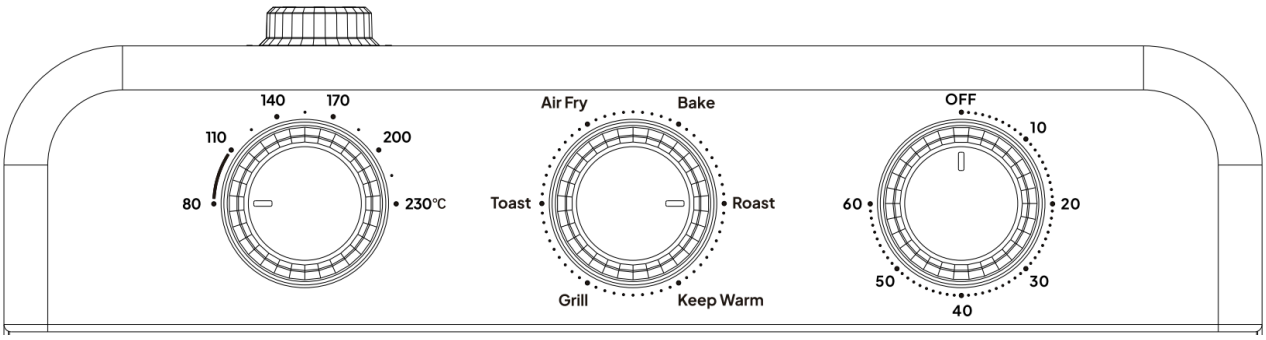

CONTROL PANEL

1. TEMP dial - sets the desired cooking temperature.
2. FUNCTION dial - selects the cooking function: Keep Warm, Grill, Roast, Toast, Bake or Air Fry.
3. TIMER dial - sets the cooking time for all functions.

HOW TO USE

Before First Use

- Remove all packaging materials.
- Clean the crumb tray, baking pan, air fry basket and wire rack in warm, soapy water. Rinse and dry thoroughly.
- Wipe the oven interior and exterior with a damp cloth. Do not immerse the appliance in water.
- Place the oven on a flat, stable, level surface, at least 25 cm (10 inches) away from the wall or any other objects.
- We recommend a trial run before first use to burn off any protective residue on the heating elements. Do this in a well-ventilated room - a small amount of smoke and odour is normal and will soon clear.

Please note:

- Do not store anything on top of the oven.
- The exterior gets very hot in use - keep out of reach of children.

Rack and Pan Positions

The oven has three positions: Position 1 (bottom), Position 2 (middle) and Position 3 (top). For most cooking, Position 2 (middle) gives the best results.

Operating Instructions

1. Place the oven on a dry, stable, level surface.
2. Fit the crumb tray into the base of the chamber. Never operate the oven without it in place.
3. Place your food in the baking pan or air fry basket, or on the wire rack, and slide it into the chosen position.
4. Close the door.
5. Unwind the power cord and plug it into the mains.
6. Set the FUNCTION dial to your chosen setting.
7. Set the TEMP dial to your chosen temperature.
8. Turn the TIMER dial to your chosen time to start cooking.

For every function, the timer rings once when the cycle finishes, and the oven switches off automatically when the time runs out. To stop cooking at any point, turn the TIMER dial to the OFF position.

COOKING FUNCTIONS

- **Roast** - for meat, poultry and vegetables.
- **Grill** - for browning and grilling.
- **Keep Warm** - holds cooked food at temperature until you're ready to serve.
- **Toast** - for toast and teacakes.
- **Bake** - the upper and lower heating elements come on. We recommend preheating for about 5 minutes before baking; include this in your total time.
- **Air Fry** - the upper heating elements come on and hot air circulates for crisp results with little or no oil.

USING THE STEAM FUNCTION

For extra moisture while cooking - ideal for baking bread, roasting and reheating without drying food out - use the built-in steam function.

1. Slowly pour up to 10ml of clean, cold water into the water inlet on the top of the oven.
2. Set your chosen function, temperature and time as usual.
3. As the oven heats, the water is converted to steam inside the cooking chamber.

Take care - hot steam will escape from the vents during cooking. Keep hands and face clear, and never add more than the maximum fill.

MAKING THE MOST OF THE STEAM FUNCTION

A little steam goes a long way. Adding water during cooking releases gentle steam into the chamber, helping to keep moisture in and bring out flavour - so meat and fish stay succulent, and breads and bakes turn out beautifully light.

For best results, let the oven come up to temperature first, then add your water. The steam is created as the water meets the heat, so adding it before the oven has preheated won't have the same effect.

Use the examples below as a starting point, then adjust to suit your recipe and taste.

Bread and pastries - 5ml (1 tsp)

Meat and fish - 10ml (2 tsp)

Please note:

- Choose the right accessory for the type of cooking you're doing.
- Always use oven gloves to remove the crumb tray, baking pan, air fry basket and wire rack after cooking.
- Always keep the crumb tray in the base of the chamber to catch oil and food.

CLEANING AND MAINTENANCE

1. Unplug the oven and allow it to cool completely before cleaning.
2. Wipe the exterior with a clean, damp cloth and dry thoroughly. Apply any cleaning product to the cloth, not directly onto the oven. Do not use abrasive cleaners, as they will damage the finish.
3. Do not press hard when cleaning around the control panel, as the printed markings can wear away over time.
4. To clean the interior walls and base, remove the crumb tray first, then wipe with a damp, soapy cloth or sponge.
5. Never use harsh abrasives, corrosive products or oven-cleaner sprays, and never use steel wool on the oven or its accessories.
6. Hand-wash the wire rack, baking pan, air fry basket and crumb tray in hot, soapy water, using a gentle scouring pad or brush if needed. These parts are not dishwasher safe.
7. Clean the crumb tray after every use - leftover food can cause smoking and become hard to remove.
8. Clean the top interior after cooking greasy foods, to prevent smoking during later use.

TROUBLESHOOTING

The oven will not turn on

- Check that it is plugged in.
- Make sure the TIMER dial is turned on.

Food is not fully cooked

- Increase the cooking temperature or time.

Food is overcooked or burnt

- Reduce the cooking temperature or time.
- Make sure food is not so large that it touches the heating elements.

Food is cooked unevenly

- Preheat the oven first.
- Make sure food is not packed too closely on the tray, rack or basket.

White smoke is coming from the oven

- A little white smoke on first use is normal.
- Otherwise, excess oil or fatty food may be the cause. Check that the inside of the oven is clean and not greasy.

Black smoke is coming from the oven

- Turn off the oven immediately and unplug it. Let it cool to room temperature. Wait for the smoke to clear before opening the door or removing the tray, basket or rack.

PLUG WIRING

THESE SAFETY INSTRUCTIONS SHOULD BE READ CAREFULLY AND KEPT IN SAFE PLACE FOR FUTURE REFERENCE.

This appliance is fitted with a plug that complies with BS 1363. Only high quality 13A (square pin) plugs that comply with this standard should be fitted.

Wires are coloured as follows:

Brown – Live

Blue – Neutral

Yellow & Green – Earth

If the appliance is fitted with a 2–core cable it is double insulated and will not have the yellow and green earth wire.

IT IS ESSENTIAL THAT WIRES ARE ATTACHED ONLY TO THEIR DESIGNATED POSITIONS IN THE PLUG

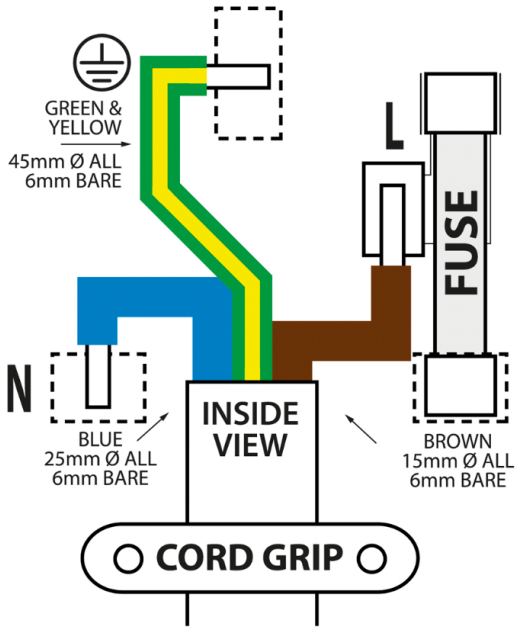

Fuses must be replaced with the same rating as the original; please refer to the fuse rating stated on the plug for this information. Only genuine fuses compliant with BS 1362 should be used.

GUARANTEE IMPORTANT

Please do not return this product without first emailing our Customer Services at:

care@cooksprofessional.co.uk

Thank you for purchasing this product, which has been made to demanding high quality standards and is guaranteed for domestic use against manufacturing faults for a period of 12 months from the date of purchase.

This guarantee does not affect your statutory rights. If your product fails due to a defect in material or workmanship during this period, please return it to the place of purchase. Normal wear and tear is not covered under the guarantee. Any guarantee is invalid if the product has been misused or subject to neglect or an attempted repair other than by our own service centre. Due to continuous product improvement, we reserve the right to change the product specification without prior notice.

EXTENDED 2 YEAR WARRANTY

WHEN YOU BUY DIRECT FROM THE COOKS PROFESSIONAL WEBSITE YOUR FREE 2 YEAR WARRANTY IS AUTOMATICALLY APPLIED UPON PURCHASE.

If you purchased your product through a different retailer you can register your product for an extended 2-year warranty by visiting our website **www.cooksprofessional.co.uk/extended-warranty**. The product must be registered, along with your contact information, within 14 days of purchase.

For full terms and conditions please visit our website.

E-mail: **care@cooksprofessional.co.uk**

Please retain for future reference.
Colours and contents may vary.

Waste electrical products should not be disposed of with household waste. Please recycle where facilities exist. Check with your Local Authority or retailer for recycling advice.

Please note that all products with the symbol below must be recycled.



Cooks Professional Limited
Unit 1
Dolbedwyn, Newchurch
Kington, Powys
HR5 3QQ
UK
care@cooksprofessional.co.uk

EU Responsible Person
(EU regulatory contact only)
eucomply OÜ
Pärnu mnt 139b-14
11317 Tallinn, Estonia
hello@eucompliancepartner.com
+33 757690241

COOKS PROFESSIONAL ‘HELP CENTRE’

Welcome to the Cooks Professional ‘Product Help’ resource centre!

Visit the Cooks Professional website and search for the product you need help with. At the bottom of the product page you’ll find the ‘Product Help’ section.

Here, you’ll find all the resources you need to make the most of your Cooks Professional products. Our online ‘Product Help’ resources are continually being updated with the latest product manuals, ‘How to Use’ and ‘Hints & Tips’ videos. Whether you’re a first-time user or a seasoned cook, we have something for everyone.

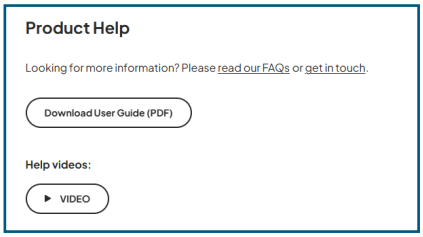

Features:

Latest Product Manuals: Access up-to-date manuals for all our products.



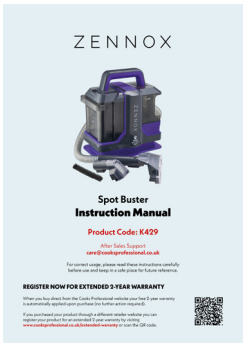



How to Use Videos: Step-by-step guides to help you get started.





Hints & Tips Videos: Expert advice and creative ideas to enhance your cooking experience.

Visit us today and explore our comprehensive collection of resources. If you have any questions, our Customer Care team is available to assist you via Live Chat, email, or our contact form.

Scan here →

cooksprofessional.co.uk

Share your purchase with us on social media and tag
@Cooksprofessional to be featured!

We'd like to know what you think!

We'd be very grateful if you can spare a few minutes to leave us a review.
Please review on the retailer website where you placed your order.

Need help?

Our friendly customer care team work Monday to Friday.
Message us at:

care@cooksprofessional.co.uk

Follow us on Instagram

6-in-1 Air Fryer Oven
K1065 • K1066 • K1067 • K1068 Instruction Manual

For correct usage, please read these instructions carefully
before use and keep in a safe place for future reference.